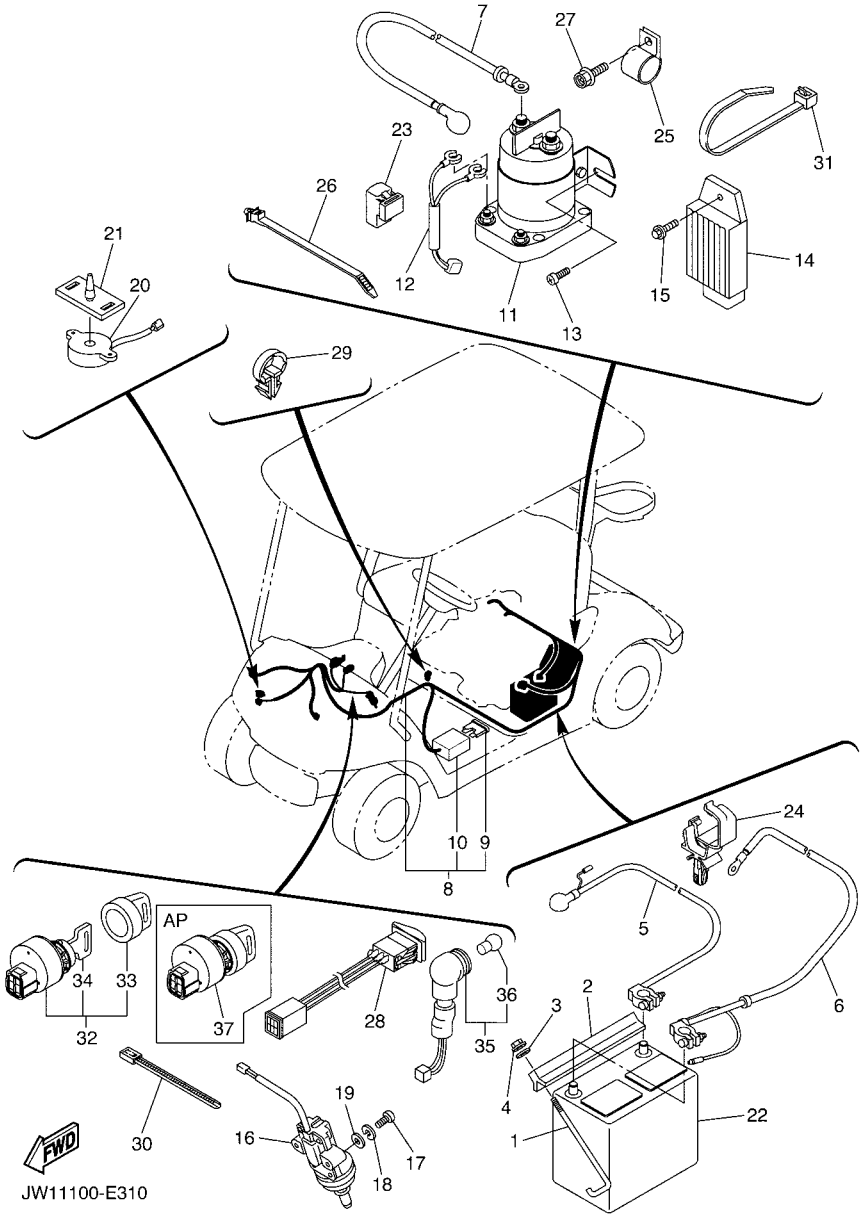

FIG. 31 ELECTRICAL 2

REF. NO.	PART NO.	DESCRIPTION	JW11					REMARKS
1	JW1–H2133–00	SCREW, FITTING	2					
2	J55–H2136–00	PLATE, BATTERY FITTING	1					
3	9290P–06200	WASHER	2					
4	95707–06500	NUT, FLANGE	2					
5	JW1–H2115–00	WIRE, PLUS LEAD	1					
6	JW1–H2116–00	WIRE, MINUS LEAD	1					
7	JW1–H2117–00	WIRE, LEAD	1					
8	JW1–H2590–00	WIRE HARNESS ASSY	1					
9	42X–82151–00	.FUSE (10A-BL)	1					
10	JR1–H2150–00	.FUSE HOLDER ASSY	1					
11	JR3–H1950–00	RELAY ASSY	1					
12	JN6–H2105–00	WIRE HARNESS	1					
13	90163–06005	SCREW, TAPPING	2					
14	JF2–81910–01	VOLTAGE REGULATOR ASSY	1					
15	90105–06876	BOLT, FLANGE	1					
16	JF7–82817–20	SWITCH	1					
17	98507–05025	SCREW, PAN HEAD	2					
18	92907–05100	WASHER, SPRING	2					
19	92907–05600	WASHER, PLATE	2					
20	JR1–H3383–01	BUZZER	1					
21	JN6–H3386–01	STAY, BUZZER	1					
22	*	BATTERY ASSY (GC-24, 12V)	1					LM
23	4U8–81950–02	RELAY ASSY	1					
24	90464–20237	CLAMP	5					
25	90461–14108	CLAMP	1					
26	90464–38800	CLAMP	3					
27	90105–08867	BOLT, FLANGE	1					