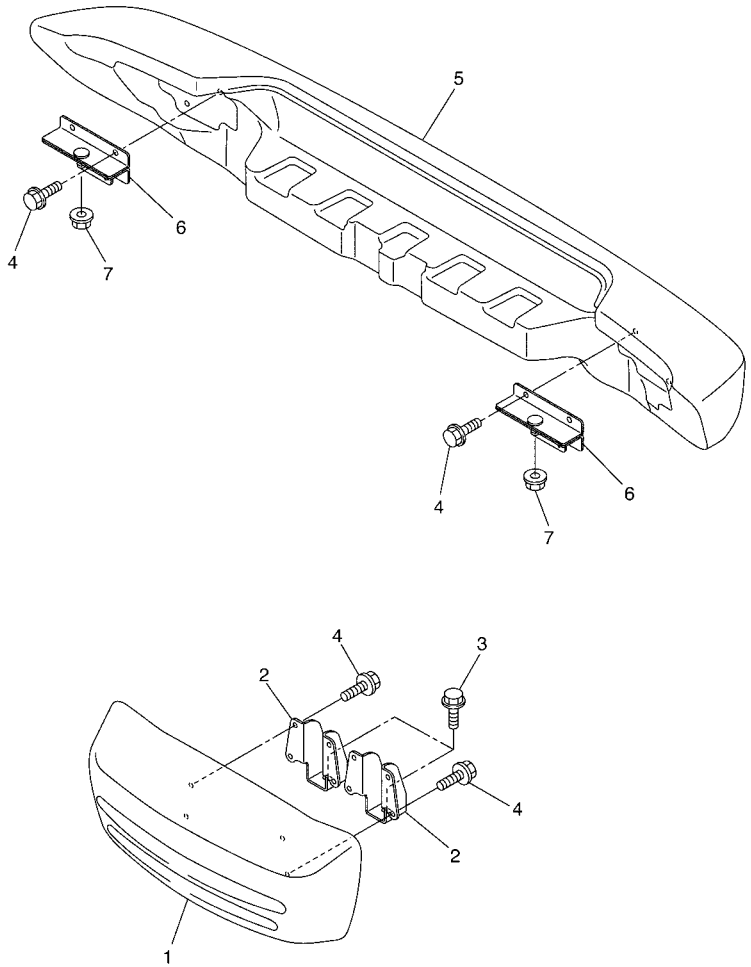

JW11100-E230

FIG. 23 BUMPER

REF. NO.	PART NO.	DESCRIPTION	JW11					REMARKS
1	JW1–K7510–00	FRONT BUMPER COMP.	1					
2	JW1–K8164–00	STAY, FRONT BUMPER (L.H)	2					
3	90105–08878	BOLT, FLANGE	2					
4	9582P–06012	BOLT, FLANGE	8					
5	JW1–K7540–00	REAR BUMPER COMP.	1					
6	JW1–K8174–00	STAY, REAR BUMPER	2					
7	9560P–10200	NUT, FLANGE	2					